MOUNTING AND OPERATING INSTRUCTIONS

EB 5206 EN

Translation of original instructions

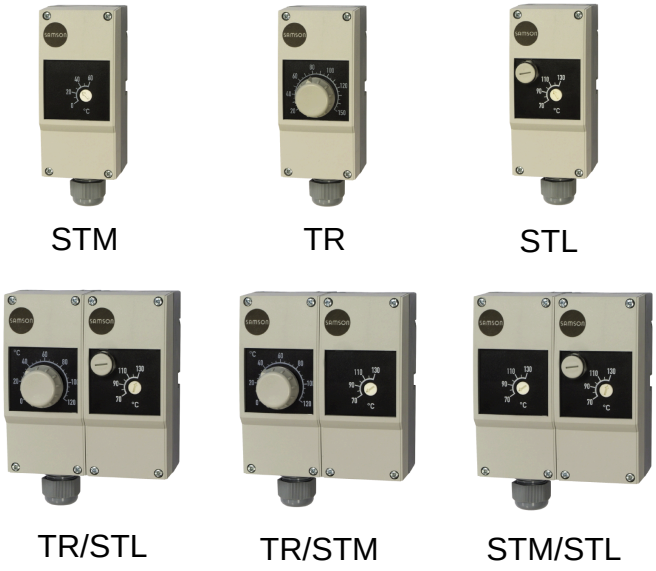

Thermostats

Type 5343 Safety Temperature Monitor (STM)
Type 5344 Temperature Regulator (TR)
Type 5345 Safety Temperature Limiter (STL)
Type 5347 Double Thermostat (TR/STL)
Type 5348 Double Thermostat (TR/STM)
Type 5349 Double Thermostat (STM/STL)

Edition March 2020

Note on these mounting and operating instructions

These mounting and operating instructions (EB) assist you in mounting and operating the device safely. The instructions are binding for handling SAMSON devices. The images shown in this document are for illustration purposes only. The actual product may vary.

⇨ For the safe and proper use of these instructions, read them carefully and keep them for later reference.

⇨ If you have any additional questions not related to the contents of this document, contact SAMSON's After-sales Service (aftersalesservice@samsongroup.com).

Documents relating to the device, such as the mounting and operating instructions, are available on our website:
▶ https://www.samsongroup.com/en/downloads/documentation

Definition of signal words

⚠ DANGER

Hazardous situations which, if not avoided, will result in death or serious injury

⚠ WARNING

Hazardous situations which, if not avoided, could result in death or serious injury

NOTICE

Property damage message or malfunction

Note

Additional information

Tip

Recommended action

1 Safety instructions and measures ... 5
1.1 Notes on possible severe personal injury ... 6
1.2 Notes on possible personal injury ... 6
1.3 Notes on possible property damage ... 7

2 Markings on the device ... 8
2.1 Nameplate ... 8

3 Design and principle of operation ... 9
3.1 Single thermostat ... 9
3.2 Double thermostat ... 9
3.3 Testing according to DIN EN 14597 ... 9
3.4 Technical data ... 10
3.5 Dimensions ... 12

4 Shipment and on-site transport ... 16
4.1 Accepting the delivered goods ... 16
4.2 Removing the packaging from the thermostat ... 16
4.3 Transporting the thermostat ... 16
4.4 Lifting the thermostat ... 16
4.5 Storing the thermostat ... 16

5 Installation ... 17
5.1 Installation conditions ... 17
5.2 Preparation for installation ... 17
5.3 Mounting the contact thermostat ... 17
5.4 Thermostat with thermowell ... 18
5.4.1 Wall mounting ... 19
5.4.2 Mounting on tanks or in pipes ... 20
5.5 Electrical connection ... 20
5.6 Attaching the lead sealing ... 21

6 Operation ... 22
6.1 Temperature regulator (TR) ... 22
6.2 Safety temperature monitor (STM) ... 22
6.3 Safety temperature limiter (STL) ... 22

7 Start-up ... 23

8 Function ... 24
8.1 Temperature regulator (TR) ... 24
8.2 Safety temperature monitor (STM) ... 24
8.3 Safety temperature limiter (STL) ... 24

9 Malfunctions ... 25
9.1 Emergency action ... 26

10 Servicing ... 27

11 Decommissioning ... 28

12 Removal ... 29
12.1 Contact thermostat ... 29
12.2 Wall mounting ... 29
12.3 Thermostat mounted on the thermowell ... 30

13 Repairs ... 31
13.1 Sending the thermostat to SAMSON ... 31

14 Disposal..... 32

15 Certificates..... 33

16 Appendix..... 40
16.1 Accessories..... 40
16.2 After-sales service..... 41

1 Safety instructions and measures

Intended use

The Types 5343, 5344, 5345, 5347, 5348 and 5349 Thermostats are designed as switching devices to open or close a circuit based on the temperature in heating, ventilation and air-conditioning systems as well as in process engineering and industrial energy transfer systems. The thermostats are designed to operate under exactly defined conditions (e.g. switching point, voltage). Therefore, operators must ensure that a thermostat is only used in operating conditions that meet the specifications at the ordering stage. In case operators intend to use a thermostat in applications or conditions other than those specified, contact SAMSON. SAMSON does not assume any liability for damage resulting from the failure to use the device for its intended purpose or for damage caused by external forces or any other external factors.

⇨ Limits and fields of application as well as possible uses (see Chapter 3.4).

Reasonably foreseeable misuse

The thermostats are not suitable for the following applications:

– Use outside the limits defined during sizing and by the technical data

Furthermore, the following activities do not comply with the intended use:

– Use of non-original spare parts
– Performing service and repair work not described

Qualifications of operating personnel

The product (Type 534x) must be mounted, started up, serviced and repaired by fully trained and qualified personnel only; the accepted industry codes and practices must be observed. According to the mounting and operating instructions, trained personnel refers to individuals who are able to judge the work they are assigned to and recognize possible hazards due to their specialized training, their knowledge and experience as well as their knowledge of the applicable standards.

Personal protective equipment

No personal protective equipment is required for the direct handling of the product (Type 534x). Work on the control valve on which the device is mounted or on the pipeline may be necessary when mounting or removing the device.

⇨ Observe the requirements for personal protective equipment specified in the valve documentation.

⇨ Check with the plant operator for details on further protective equipment.

Revisions and other modifications

Revisions, conversions or other modifications of the product (Type 534x) are not authorized by SAMSON. They are performed at the user's own risk and may lead to safety hazards, for example. Furthermore, the product may no longer meet the requirements for its intended use. Use of the device is no longer permitted in this case.

Safety features

In the event of a capillary tube rupture, the changeover contact moves and stays permanently in a position defined by its design.

A safety temperature limiter (STL) is, in this case, in the fail-safe position. It cannot be unlocked.

Warning against residual hazards

The product (Type 534x) has a direct influence on the control valve. To avoid personal injury or property damage, plant operators and operating personnel must prevent hazards that could be caused in the control valve by the process medium, the operating pressure, the signal pressure or by moving parts by taking appropriate precautions.

Plant operators and operating personnel must observe all hazard statements, warnings and caution notes in these mounting and operating instructions, especially for installation, start-up and service work.

Responsibilities of the operator

Operators are responsible for proper use and compliance with the safety regulations. Operators are obliged to provide these mounting and operating instructions to the operating personnel and to instruct them in proper operation. Furthermore, operators must ensure that operating personnel or third parties are not exposed to any danger.

Responsibilities of operating personnel

Operating personnel must read and understand these mounting and operating instructions as well as the specified hazard statements, warnings and caution notes. Furthermore, operating personnel must be familiar with the applicable health, safety and accident prevention regulations and comply with them.

Referenced standards, directives and regulations

The product (Type 534x) with a CE marking fulfills the requirements of the following Directives:

– RoHS Directive 2011/65/EU

– EMC Directive 2014/30/EU

– Low-voltage Directive 2014/35/EU

The declarations of conformity and certificates are included in Chapter .

The product (Type 534x) with a CE marking is designed for use in low voltage installations.

⇨ For wiring, maintenance and repair, observe the relevant safety regulations.

For electrical installation, observe the relevant electrotechnical regulations and the accident prevention regulations that apply in the country of use. In Germany, these are the VDE regulations and the accident prevention regulations of the employers' liability insurance.

Referenced documentation

The following documents apply in addition to these mounting and operating instructions:

▶ T 5200 Information Sheet: Temperature Sensors and Thermostats

1.1 Notes on possible severe personal injury

⚠ DANGER

Risk of fatal injury due to electric shock.

⇨ Before connecting wiring, performing any work on the device or opening the device, disconnect the supply voltage and protect it against unintentional reconnection.

⇨ Only use protective equipment that can be protected against unintentional reconnection of the power supply.

⇨ Do not remove any covers to perform adjustment work on live parts.

The thermostats are protected against spray water (IP54).

⇨ Avoid jets of water.

⚠ DANGER

Risk of bursting in pressure equipment.

⇨ Before starting any work on the thermostat, depressurize all plant sections affected as well as the valve.

⇨ Drain the process medium from all the plant sections affected.

⇨ Wear appropriate personal protective equipment (safety gloves, goggles etc.).

⚠ WARNING

Risk of personal injury due to incorrect operation, use or installation as a result of information on the device being illegible.

Over time, markings, labels and nameplates on the device may become covered with dirt or become illegible in some other way. As a result, hazards may go unnoticed and the necessary instructions not followed. There is a risk of personal injury.

⇨ Keep all relevant markings and inscriptions on the device in a constantly legible state.

⇨ Immediately renew damaged, missing or incorrect nameplates or labels.

1.2 Notes on possible personal injury

⚠ WARNING

Risk of burn injuries as a result of touching hot or cold components.

Thermostats installed in pipelines as well as the surrounding pipes, valves and other components may be hot or cold.

⇨ Before performing any work on the device, shut off the medium flow.

⇨ Allow devices to cool down or warm up to the ambient temperature.

⇨ Wear personal protective equipment that is suitable for the purpose.

1.3 Notes on possible property damage

NOTICE

Risk of damage to the thermostat due to the supply voltage exceeding the permissible tolerances.

The Type 534x Thermostat is designed for use according to regulations for low-voltage installations.

⇨ Observe the permissible tolerances of the supply voltage.

NOTICE

Risk of thermostat damage due to incorrect mounting.

⇨ Mount the Type 534x Thermostat properly and depending on the type of mounting.

NOTICE

Risk of thermostat malfunction due to measuring fluid escaping upon breakage of the capillary tube.

⇨ Do not bend the capillary tube.

⇨ Do not cut the capillary tube.

⇨ Do not pull at the sensor on uncoiling the capillary tube.

⇨ Do not use a smaller bending radius than 5 mm.

NOTICE

Risk of damage to the thermostat due to turning the set point adjuster too far.

The temperature set point can be adjusted manually at the thermostat. The thermostat will be damaged if the set point adjuster is turned beyond one of its two end stops.

⇨ Do not turn the set point adjuster past its end stops.

NOTICE

Incorrect connection of the electrical power supply will damage the thermostat.

The thermostat has terminals that conduct electricity and are integrated into a circuit.

⇨ Do not apply the voltage (L and N) to terminals 1/2 or 1/4.

⇨ Observe the tolerances of the technical data.

2 Markings on the device

2.1 Nameplate

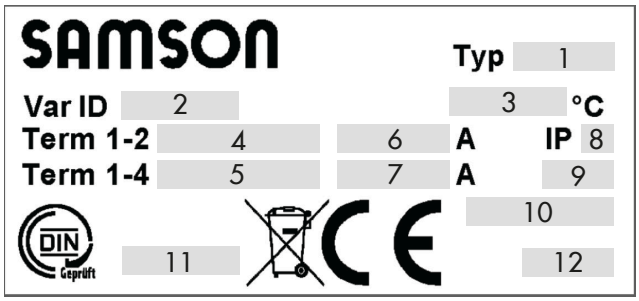

1 Type designation
2 Configuration ID/material number
3 Temperature measuring range
4 Perm. voltage of NC contact
5 Perm. voltage of NO contact
6 Max. current of NC contact
7 Max. current of NO contact
8 Degree of protection
9 Max. perm. temperature for housing
10 Serial number
11 DIN registration no.
12 Date of manufacture

3 Design and principle of operation

3.1 Single thermostat

The thermostat is equipped with a changeover contact. When the thermostat is triggered, the connection between connections 1 and 2 are interrupted and the connections 1 and 4 are connected.

⇨ See Chapter 5.

Safety temperature monitor (STM)

A snap-action switch in the STM is triggered when the temperature at the temperature sensor rises above the adjusted set point. When the temperature falls below the set point by approximately 8 K, the switch returns to its original position.

The changeover contact interrupts the connections 1 and 2 and connects the connections 1 and 4 when the temperature at the temperature sensor falls below -20 °C. The snap-action switch automatically returns to the original position as soon as the temperature at the temperature sensor rises above -20 °C again.

The snap-action switch is triggered when the capillary tube breaks.

Temperature regulator (TR)

The snap-action switch is triggered when the temperature at the temperature sensor rises above the adjusted set point. When the temperature falls below the set point by approximately 4 K, the switch returns to its original position.

Safety temperature limiter (STL)

The snap-action switch is triggered and locked when the temperature at the temperature sensor rises above the adjusted set point. When the temperature falls below the set point by approximately 10 %, the snap-action switch can be unlocked manually.

The changeover contact interrupts the connections 1 and 2 and connects the connections 1 and 4 when the temperature at the temperature sensor falls below -20 °C. The STL automatically unlocks as soon as the temperature at the temperature sensor rises above -20 °C again.

The snap-action operation is triggered and remains in this position when the capillary tube breaks. It is not possible to unlock the device in this case.

3.2 Double thermostat

Double thermostats are two thermostats that work independently but share the same housing. The principle of operation is the same as that of the single thermostat. Each thermostat has its own capillary tube.

TR/STL is the combination of a temperature regulator and safety temperature limiter.

TR/STM is the combination of a temperature regulator and safety temperature monitor.

STM/STL is the combination of a safety temperature monitor and safety temperature limiter.

3.3 Testing according to DIN EN 14597

The Types 5343, 5344 and 5345 Thermostats are tested by the German technical surveillance association TÜV according to DIN EN 14597. Tested versions are indicated on the nameplate.

Type	DIN registration no.
5343	STW1209
5344	TR1208
5345	STB1207

3.4 Technical data

Table 1: *General technical data*

Single thermostats: Type 5343 (STM), Type 5344 (TR), Type 5345 (STL) Double thermostats: Type 5347 (TR/STL), Type 5348 (TR/STM), Type 5349 (STM/STL)			
Permissible ambient temperature			
	Transportation and storage	-30 to +80 °C	
	During use	Max. 80 °C	
	Pipe temperature when mounted as a contact thermostat	Max. 120 °C	
Sensor length/diameter		87 mm/6 mm	
Capillary tube length		2000 mm	
Degree of protection		IP54 according to EN 60529	
Cable entry		M20x1.5 cable gland, suitable for 6 to 12 mm cable diameter	
Minimum switching capacity		AC/DC: 24 V, 100 mA	
Maximum switching capacity			
	Temperature regulator (TR)	With 230 V AC +10 %	NC contact: 16 A (2.5) cos φ = 1 (0.6) NO contact: 6.3 A (2.5) cos φ = 1 (0.6)
		With 230 V DC +10 %	NC contact: 0.25 A NO contact: 0.25 A
	Safety temperature monitor (STM)	With 230 V AC +10 %	NC contact: 16 A (2.5) cos φ = 1 (0.6) NO contact: 6.3 A (2.5) cos φ = 1 (0.6)
		With 230 V DC +10 %	NC contact: 0.25 A NO contact: 0.25 A
	Safety temperature limiter (STL)	With 230 V AC +10 %	NC contact: 16 A (2.5) cos φ = 1 (0.6) NO contact: 2 A (2.5) cos φ = 1 (0.4)
		With 230 V DC +10 %	NC contact: 0.25 A NO contact: 0.25 A
Influence of mean ambient temperature based on the set point		A shift of the switching point arises when the ambient temperature at the knob and at the capillary tube deviates from the calibration ambient temperature of +22 °C: Higher ambient temperature → Lower switching point Lower ambient temperature → Higher switching point This influence is minimized by temperature compensation.	
Electrical connection		Spring-cage terminals, 0.75 to 2.5 mm² wire cross-section	
Materials			
	Bottom section of the housing	PA (reinforced)	
	Housing cover	ABS with window (PMMA)	
	Temperature sensor, capillary tube	Cu (copper)	
Weight			
	Single thermostat	Approx. 0.225 kg	
	Double thermostat	Approx. 0.45 kg	
Conformity		CE	
Testing according to DIN EN 14597 (STM, TR and STL)		DIN Geprüft	

Table 2: *Technical data · Safety temperature monitors (STM)*

Type	Set point range	Hysteresis	Switching point accuracy		Maximum medium temperature
5343-1	0 to 60 °C	8 K	Range: 0 to 25 °C	0 K -8.5 K	85 °C
			Range: 25 to 35 °C	0 K -6 K	
			Range: 35 to 60 °C	0 K -8.5 K	
5343-2	40 to 100 °C	8 K	Range: 40 to 100 °C	0 K -8.5 K	125 °C
5343-3	70 to 130 °C	8 K	Range: 70 to 130 °C	0 K -8.5 K	155 °C
5343-4	35 to 95 °C	8 K	Range: 35 to 95 °C	0 K -8.5 K	120 °C

Table 3: *Technical data · Temperature regulators (TR)*

Type	Set point range	Hysteresis	Switching point accuracy		Maximum medium temperature
5344-1	0 to 120 °C	3 K	Range: 0 to 80 °C	+7.2 K -7.2 K	145 °C
			Range: 80 to 120 °C	+3.6 K -3.6 K	
5344-2	20 to 150 °C	4 K	Range: 20 to 106 °C	+7.8 K -7.8 K	175 °C
			Range: 106 to 150 °C	+3.9 K -3.9 K	

Table 4: *Technical data · Safety temperature limiters (STL)*

Type	Set point range	Hysteresis	Switching point accuracy		Maximum medium temperature
5345-1	70 to 130 °C	8 K	Range: 70 to 130 °C	0 K -8.5 K	155 °C
5345-2	30 to 90 °C	8 K	Range: 30 to 90 °C	0 K -8.5 K	115 °C

Table 5: *Technical data · Double thermostat (TR/STL)*

Type	Set point range	Hysteresis	Switching point accuracy		Maximum medium temperature
5347-1	TR: 0 to 120 °C	3 K	Range: 0 to 80 °C	+7.2 K -7.2 K	145 °C
			Range: 80 to 120 °C	+3.6 K -3.6 K	
	STL: 70 to 130 °C	8 K	Range: 70 to 130 °C	0 K -8.5 K	
5347-2	TR: 0 to 120 °C	3 K	Range: 0 to 80 °C	+7.2 K -7.2 K	115 °C
			Range: 80 to 120 °C	+3.6 K -3.6 K	
	STL: 30 to 90 °C	8 K	Range: 30 to 90 °C	0 K -8.5 K	

Table 6: *Technical data · Double thermostat (TR/STM)*

Type	Set point range	Hysteresis	Switching point accuracy		Maximum medium temperature
5348-1	TR: 0 to 120 °C	3 K	Range: 0 to 80 °C	+7.2 K -7.2 K	145 °C
			Range: 80 to 120 °C	+3.6 K -3.6 K	
	STM: 70 to 130 °C	8 K	Range: 70 to 130 °C	0 K -8.5 K	
5348-2	TR: 0 to 120 °C	3 K	Range: 0 to 80 °C	+7.2 K -7.2 K	125 °C
			Range: 80 to 120 °C	+3.6 K -3.6 K	
	STM: 40 to 100 °C	8 K	Range: 40 to 100 °C	0 K -8.5 K	

Table 7: *Technical data · Double thermostat (STM/STL)*

Type	Set point range	Hysteresis	Switching point accuracy		Maximum medium temperature
5349-1	STM: 70 to 130 °C	8 K	Range: 70 to 130 °C	0 K -8.5 K	145 °C
	STL: 70 to 130 °C		Range: 70 to 130 °C	0 K -8.5 K	

Table 8: *Technical data · Properties of the measuring fluid*

Dangerous reaction	No
Ignition temperature	375 °C
Water hazard	Class 1, slightly contaminating
Toxicological specifications	
Irritant	No
Health hazard	No
Toxic	No

3.5 Dimensions

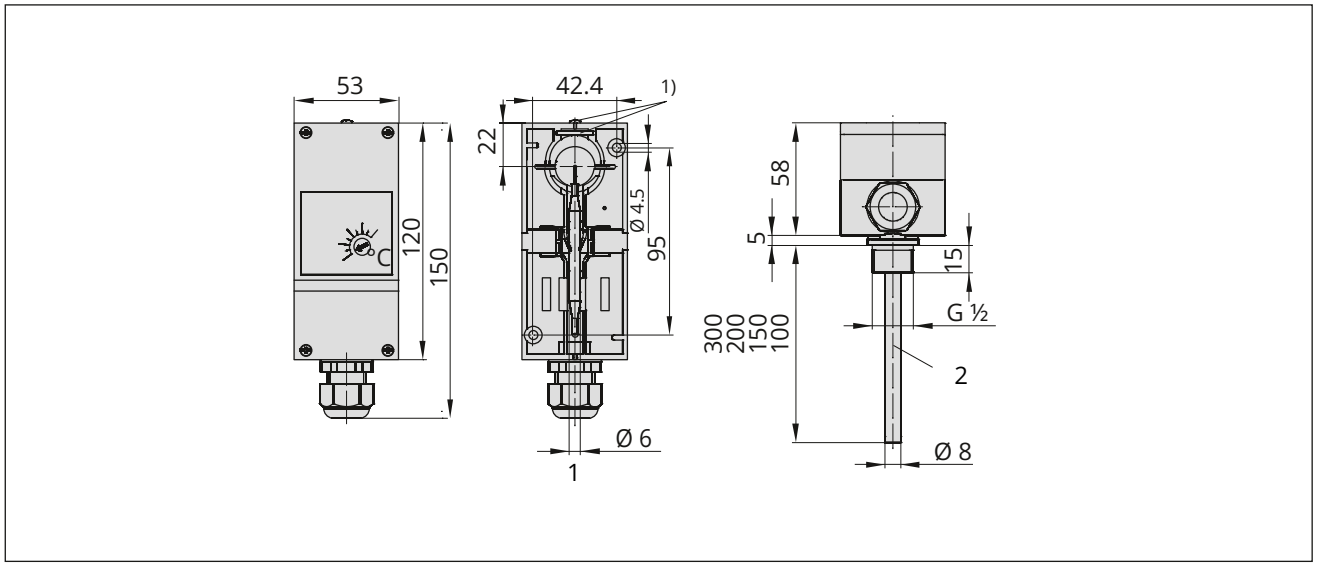

Fig. 1: *Dimensions in mm · Type 5343 Safety Temperature Monitor STM*

1) Metal plate and screw for fastening the thermostat onto the thermowell (wall mounting)

1 Sensor

2 Thermowell (accessories)

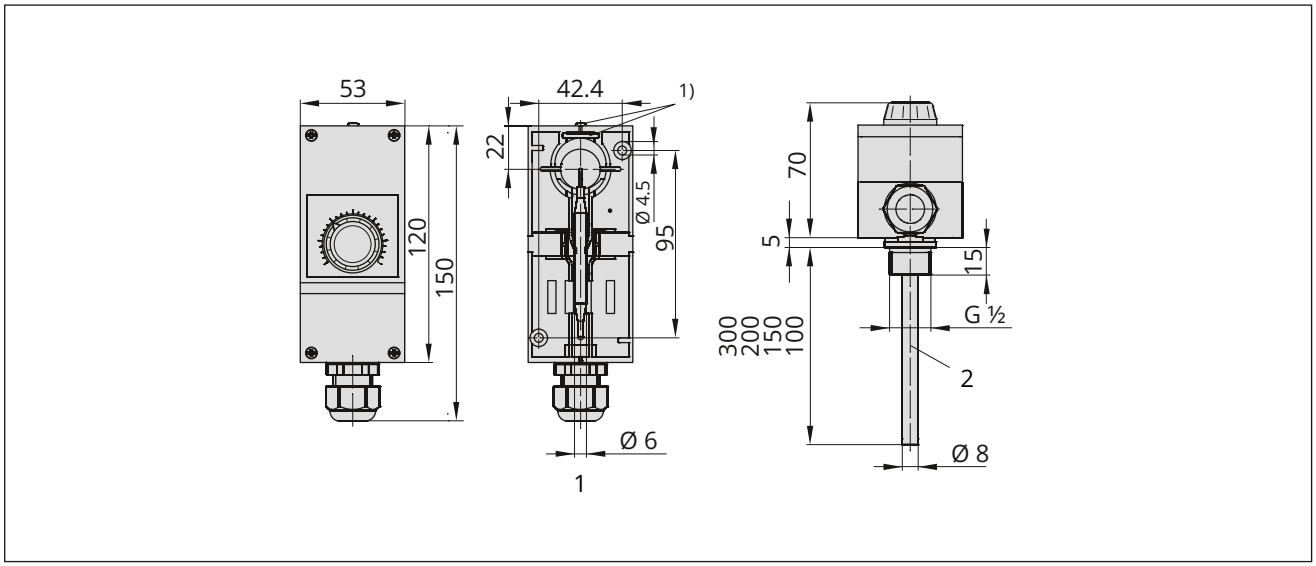

Fig. 2: *Dimensions in mm · Type 5344 Temperature Regulator TR*

1) Metal plate and screw for fastening the thermostat onto the thermowell (wall mounting)

1 Sensor

2 Thermowell (accessories)

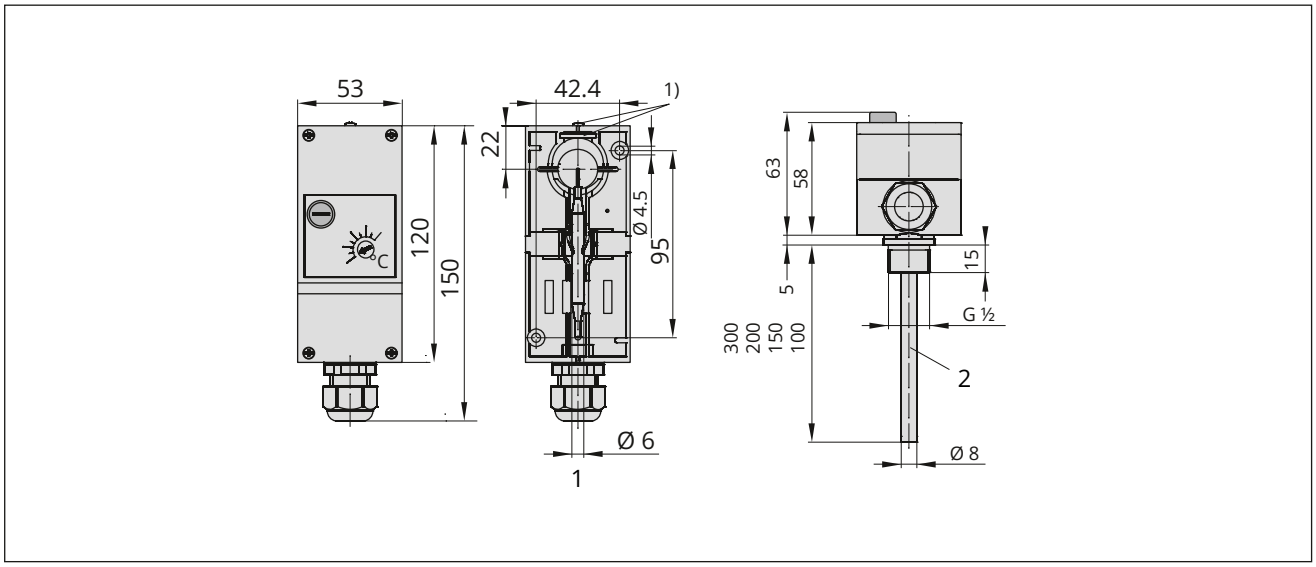

Fig. 3: *Dimensions in mm · Type 5345 Safety Temperature Limiter STL*

1) Metal plate and screw for fastening the thermostat onto the thermowell (wall mounting)

1 Sensor

2 Thermowell (accessories)

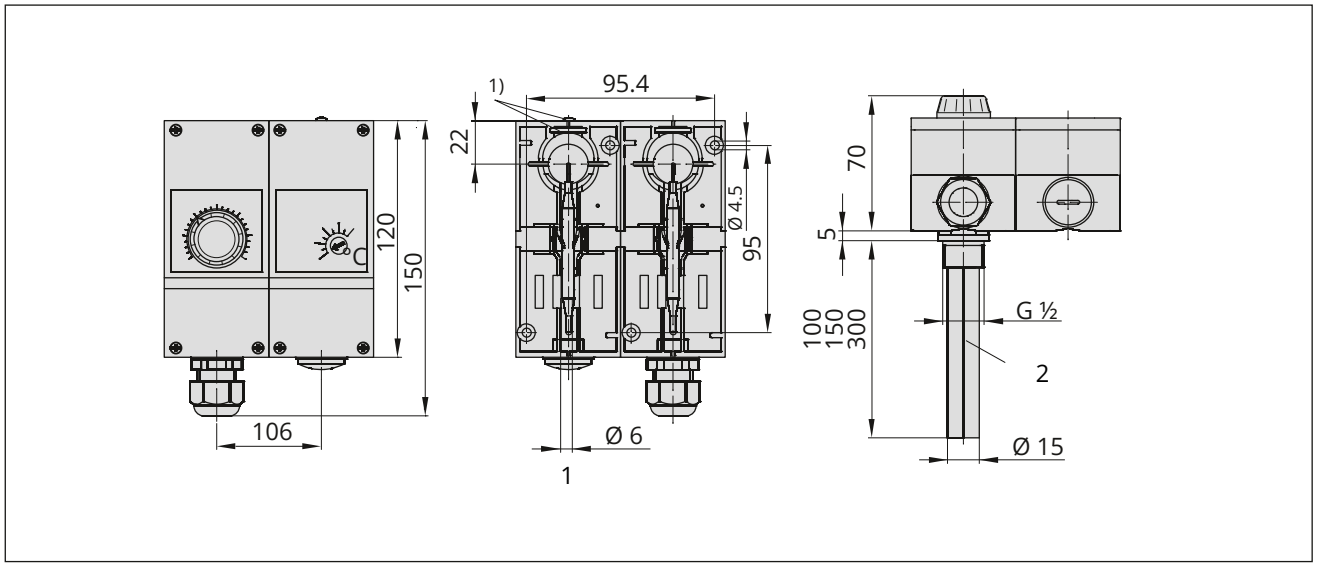

Fig. 4: *Dimensions in mm · Type 5348 Double Thermostat TR/STM*

1) Metal plate and screw for fastening the thermostat onto the thermowell (wall mounting)

1 Sensor

2 Thermowell (accessories)

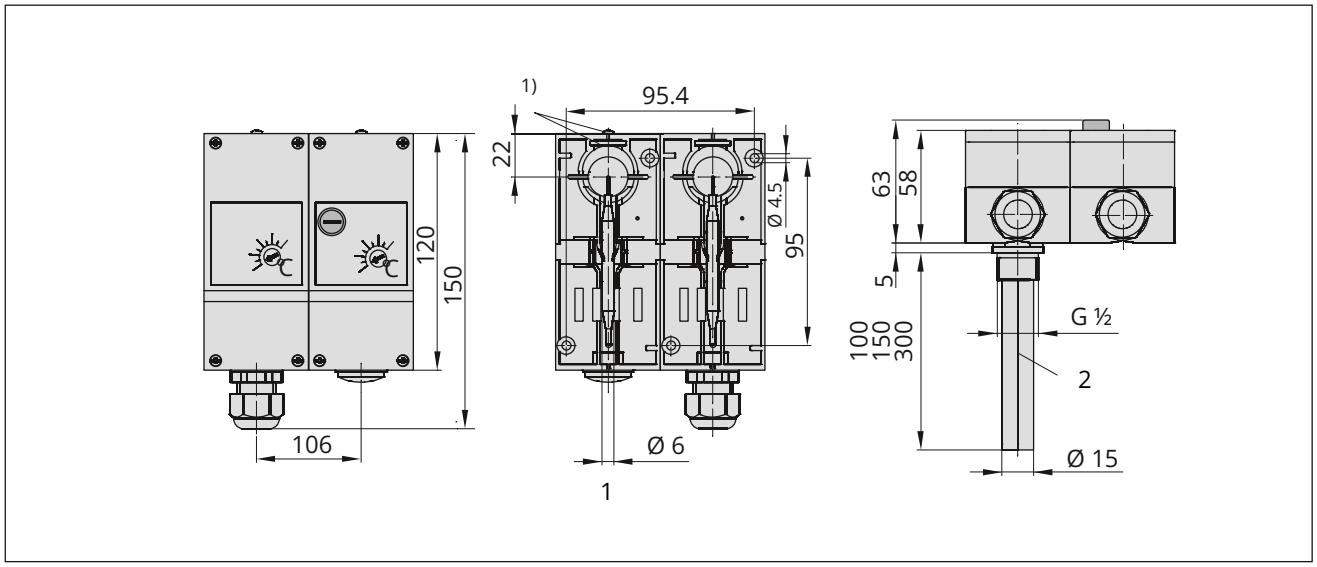

Fig. 5: *Dimensions in mm · Type 5349 Double Thermostat STM/STL*

1) Metal plate and screw for fastening the thermostat onto the thermowell (wall mounting)

1 Sensor

2 Thermowell (accessories)

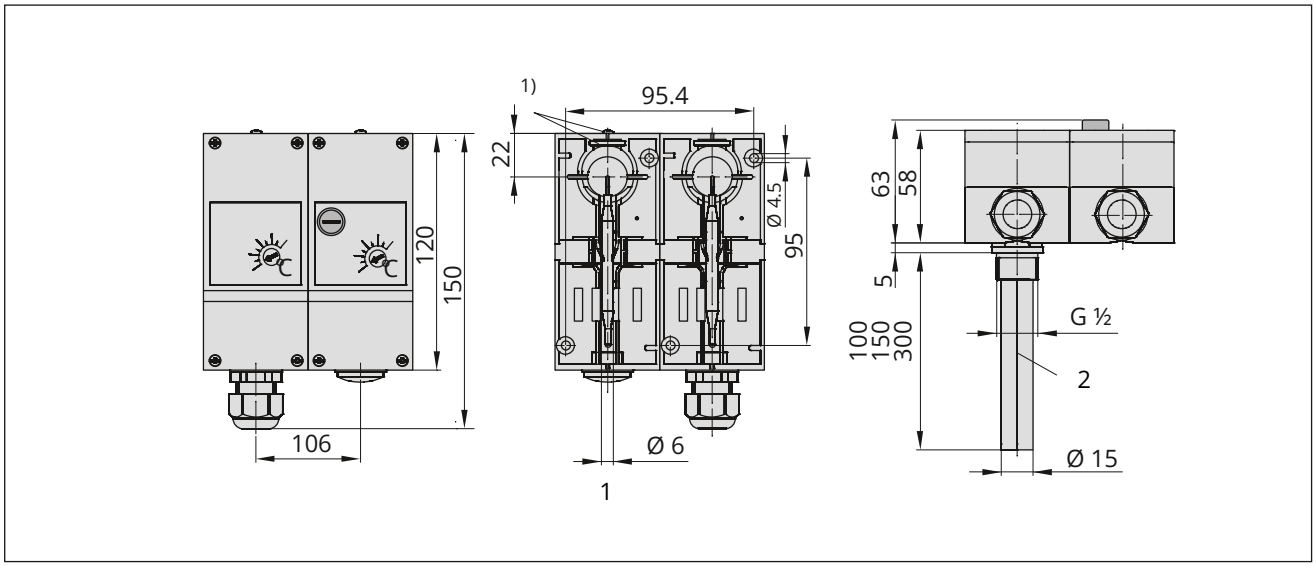

Fig. 6: *Dimensions in mm · Type 5349 Double Thermostat STM/STL*

1) Metal plate and screw for fastening the thermostat onto the thermowell (wall mounting)

1 Sensor

2 Thermowell (accessories)

4 Shipment and on-site transport

The work described in this chapter is to be performed only by personnel appropriately qualified to carry out such tasks.

4.1 Accepting the delivered goods

After receiving the shipment, proceed as follows:

1. Compare the shipment received with the delivery note.
2. Check the shipment for transportation damage. Report any damage to SAMSON and the forwarding agent (refer to delivery note).

4.2 Removing the packaging from the thermostat

i Note

Do not remove the packaging until immediately before mounting and start-up.

1. Remove the packaging from the thermostat.
2. Check scope of delivery (see Table 9).
3. Dispose of the packaging in accordance with the valid regulations.

Table 9: *Scope of delivery*

1x Type 534x Thermostat
including set point adjuster (TR only)
1x IP 5206 EN document

4.3 Transporting the thermostat

⇨ Protect the thermostat against external influences (e.g. impact).

⇨ Protect the thermostat against moisture and dirt.

⇨ Observe the permissible transportation temperature range of -30 to +80 °C.

4.4 Lifting the thermostat

Due to the low service weight, lifting equipment is not required to lift the thermostat.

4.5 Storing the thermostat

NOTICE

Risk of thermostat damage due to incorrect storage.

⇨ *Observe the storage instructions.*

⇨ *Avoid longer storage periods.*

⇨ *Contact SAMSON in case of different storage conditions or longer storage times.*

i Note

SAMSON recommends to regularly check the thermostat and the prevailing storage conditions during long storage periods.

Storage instructions

⇨ Protect the thermostat against external influences (e.g. impact).

⇨ Protect the thermostat against moisture and dirt.

⇨ Make sure that the ambient air is free of acids or other corrosive media.

⇨ Observe the permissible storage temperature from -30 to +80 °C.

⇨ Do not place any objects on the thermostat.

5 Installation

5.1 Installation conditions

Work position

If not described otherwise in the valve or actuator documentation, the work position for the thermostat is the front view looking onto the operating controls.

Mounting position

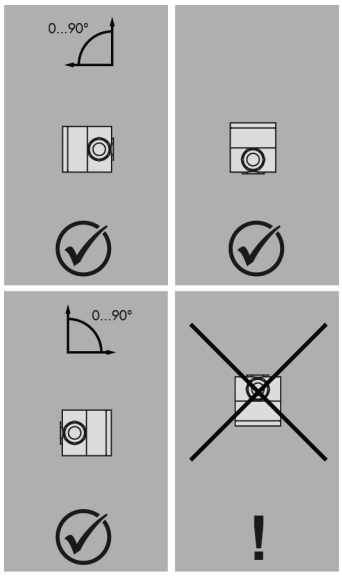

Fig. 7: *Mounting position*

Contact thermostat

When the thermostat is installed as a contact thermostat, the sensor must not point upward (bottom of the thermostat).

Thermostat with thermowell

The thermostat with a thermowell may be installed in any position.

5.2 Preparation for installation

Before installation, make sure that the following conditions are met:

– The thermostat is not damaged.

Proceed as follows:

– Lay out the necessary material and tools to have them ready during installation work.

Seals

The supplied seal must be inserted to meet the requirements for degree of protection IP54 (see Fig. 8).

NOTICE

Inadequate protection against spray water through insufficient sealing.

⇨ *Do not remove the seals in the housing (1) and on the set point adjuster of the temperature regulator (4). See Fig. 8.*

⇨ *The thermostat must only be operated with an inserted seal (6). See Fig. 8.*

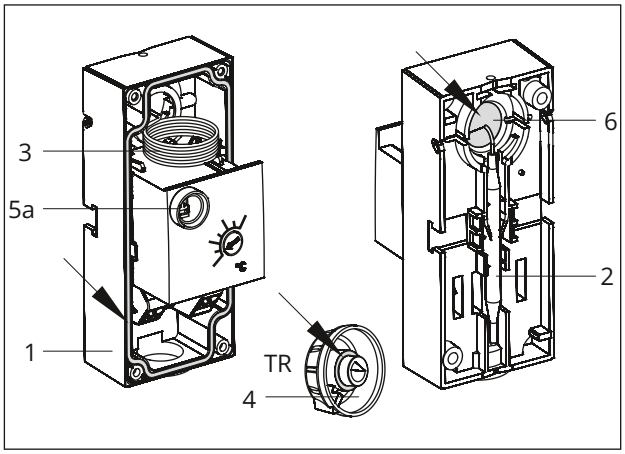

Fig. 8: *Single thermostat · Inside view*

1 Thermostat
2 Sensor
3 Capillary tube
4 Set point adjuster (TR only)
5a Spring for unlocking (STL only)
6 Seal for degree of protection IP54

5.3 Mounting the contact thermostat

Single thermostats can be mounted onto pipes with diameters between 15 and 100 mm. A strap is required in this case (see Chapter 16.1).

1. Insert seal (6) as shown in Fig. 9.
2. Thread the strap (8) behind the sensor holder at the back of the housing (1).
3. Use the strap to attach the thermostat to the pipe.
4. Undo screws on the housing cover and remove the housing cover.
5. Perform the electrical connection according to Chapter 5.5.
6. Put on housing cover. Screw in the screws and tighten them.
7. Place the set point adjuster on the shaft (TR only).

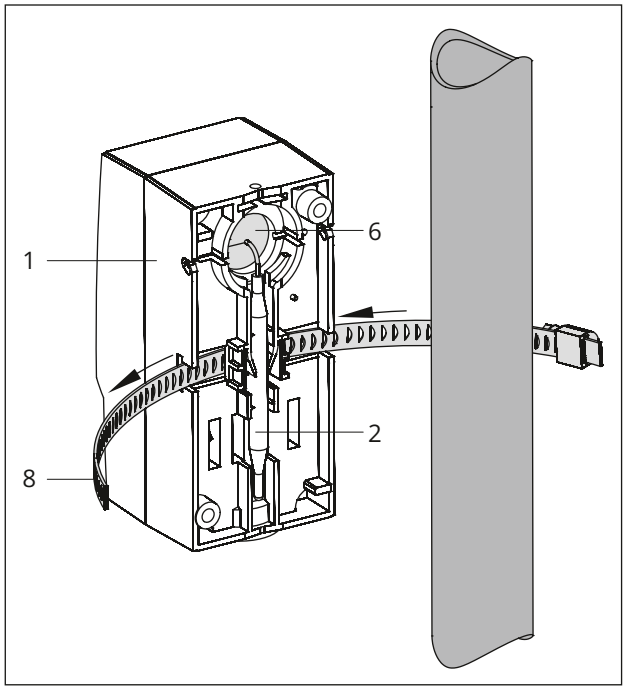

Fig. 9: *Mounting a contact thermostat*

1 Thermostat
2 Sensor
6 Seal
8 Strap

5.4 Thermostat with thermowell

Measures for preparation before mounting the thermowell

i ***Note***

The sensors of double thermostats share the same thermowell (see Chapter 16.1).

Before fastening the thermostat, uncoil the capillary tube to the required length:

– For wall mounting, the required length depends on the required capillary tube and length of the thermowell
– For mounting the thermostat on tanks/in pipes, the required length depends on the length of the thermowell

! ***NOTICE***

Risk of thermostat malfunction due to measuring fluid escaping upon breakage of the capillary tube.

⇨ *Do not bend the capillary tube.*

⇨ *Do not cut the capillary tube.*

⇨ *Do not pull at the sensor on uncoiling the capillary tube.*

⇨ *Do not use a smaller bending radius than 5 mm.*

1. Undo the screws on the thermostat's front cover and remove the cover.
2. Detach the sensor from the back of the thermostat.
3. Route the sensor through the back of the housing to the front.
4. Uncoil the capillary to the required length (see Fig. 10).
5. Route the sensor again through the back of the housing (see Fig. 10).
6. Insert seal (6) as shown in Fig. 13 or Fig. 14.

⇨ Proceed as described in Chapter 5.4.1 or in Chapter 5.4.2 depending on how the thermostat is to be mounted.

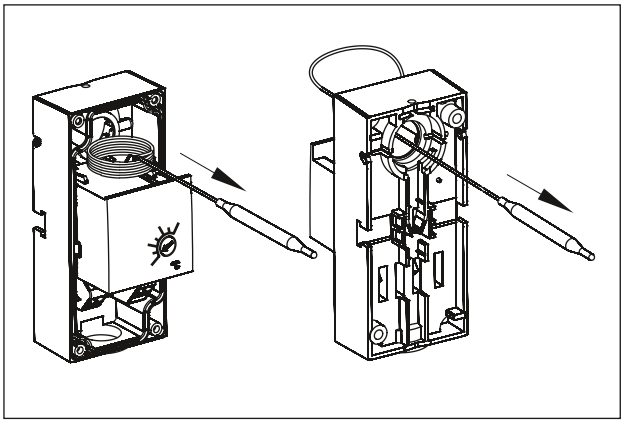

Fig. 10: *Uncoiling the capillary tube*

5.4.1 Wall mounting

⇨ See Fig. 11 to Fig. 13.

The thermostats are fastened to the wall using two screws (not included in the scope of delivery).

1. Drill holes in wall.
2. Insert the seal (6).
3. Fix the capillary tube in the notch at the side of the thermostat housing or let it run down the middle.
4. Fasten the back of the housing (1) using two screws to the wall.
5. Screw the thermowell (7) into the pipe or tank.
6. Push the sensor (2) as far as it will go into the thermowell (7).
7. Fasten the capillary tube (3) to the thermowell (7) using the supplied clip (7a).
8. Connect the wiring as shown in Chapter 5.5.
9. Put on front cover. Screw in the screws and tighten them.
10. Place the set point adjuster on the shaft (TR only).

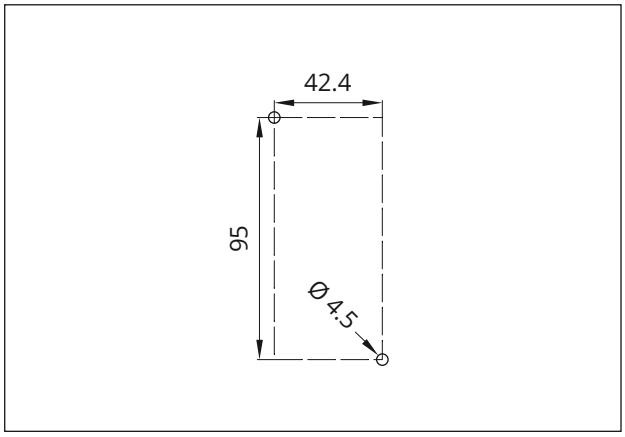

Fig. 11: *Dimensions in mm · Drilling template for single thermostat*

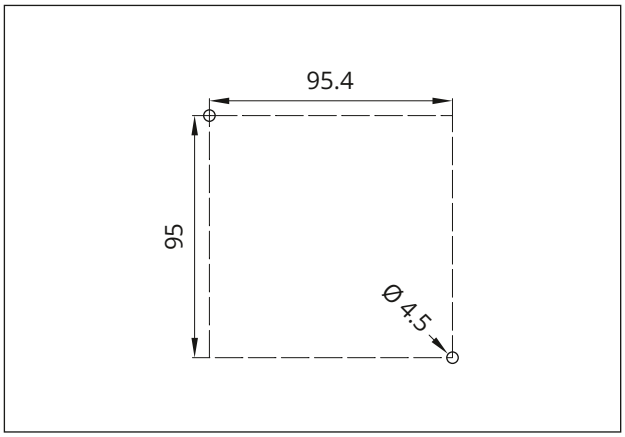

Fig. 12: *Dimensions in mm · Drilling template for double thermostat*

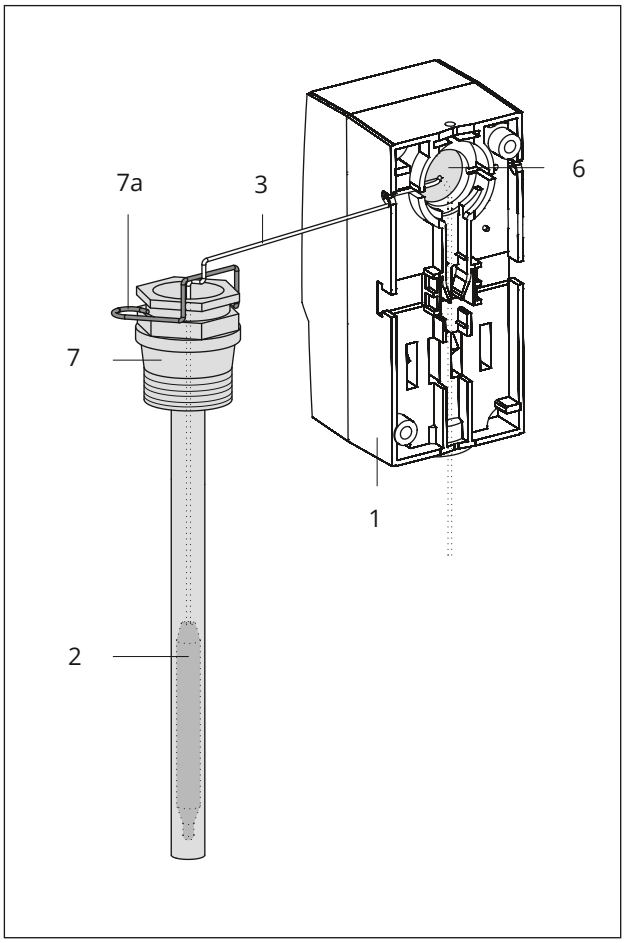

Fig. 13: *Wall mounting · Capillary tube in the thermowell*

1 Thermostat
2 Sensor
3 Capillary tube
6 Seal
7 Thermowell
7a Clip

5.4.2 Mounting on tanks or in pipes

⇨ See Fig. 14.

The thermostat is fastened to the thermowell which is screwed into place.

1. Insert the seal (6).
2. Screw the thermowell (7) into the pipe or tank.
3. Insert the small metal plate (7b) at the back of the housing (1) and secure in place with the screw (7c).
4. Push the sensor (2) as far as it will go into the thermowell (7), making sure that the round hole at the back of the housing (1) rests on the collar on the thermowell.
5. Push the thermostat approx. 2 mm lengthways toward the SAMSON logo to allow the thermowell to engage.
6. Turn the screw (7c) until the housing is fixed into place on the thermowell.
7. Connect the wiring as shown in Chapter 5.5.
8. Put on front cover. Screw in the screws and tighten them.
9. Place the set point adjuster on the shaft (TR only).

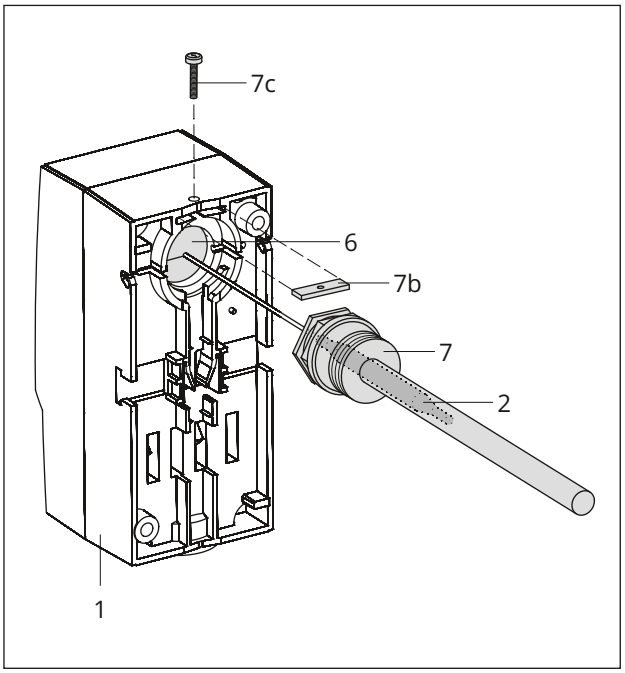

Fig. 14: *Mounting with thermowell onto a tank or pipe*

1 Thermostat
2 Sensor
6 Seal
7 Thermowell
7b Metal plate
7c Screw

5.5 Electrical connection

⚠ DANGER

Risk of fatal injury due to electric shock.

⇨ *Upon installation of the electric cables, you are required to observe the regulations concerning low-voltage installations according to DIN VDE 0100 as well as the regulations of your local energy supplier.*

⇨ *Use a suitable voltage supply which does not allow any dangerous voltage to reach the device in normal operation and in the event of a malfunction in the system or any other system parts.*

⇨ *Connect the grounding conductor to the PE terminal.*

⇨ *Route wires of double thermostats through the opening in the intermediate wall to the second thermostat.*

⇨ *Seal openings not used for cable entry with a blanking cap.*

Cable entry

⇨ Route the wires through the cable gland (M20x1.5) into the inside of the thermostat.

The thermostat is equipped with a spring terminal. The permissible wire cross-section of the wires being connected is between 0.75 to 2.5 mm².

Connection

Open the thermostat housing and wire the thermostat according to Fig. 15.

When rigid wire ends are used:

⇨ Strip 11 to 13 mm insulation off the wire ends and place them into the terminal (⊂⊃) as far they will go.

When flexible wire ends without ferrules are used:

⇨ Use a slotted screwdriver to keep the spring open (opening □) and place the wire end into the terminal (⊂⊃) as far it will go.

When flexible wire ends with ferrules are used:

⇨ Fit ferrules to the wire ends (see DIN EN IEC 60947-1 (VDE 0660-100)).

⇨ Use a suitable crimping tool.

⇨ Place the wire end into the terminal (⊂⊃) as far it will go.

i Note

The wire ends can be pulled out of the terminal by holding the spring open with a slotted screwdriver (opening □).

Electrical connection

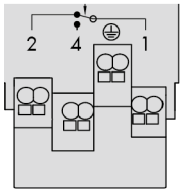

Temperature regulator (TR) · Safety temperature monitor (STM):

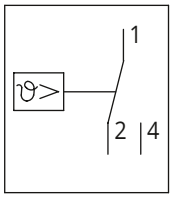

Safety temperature limiter (STL):

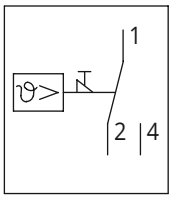

Fig. 15: *Electrical connection*

5.6 Attaching the lead sealing

! NOTICE

Impaired thermostat functioning due to incorrectly attached lead sealing.

⇨ *Only lead-seal in the gray-colored area.*

i Note

Drill the holes for lead sealing. The lead-seal is not included in the scope of delivery.

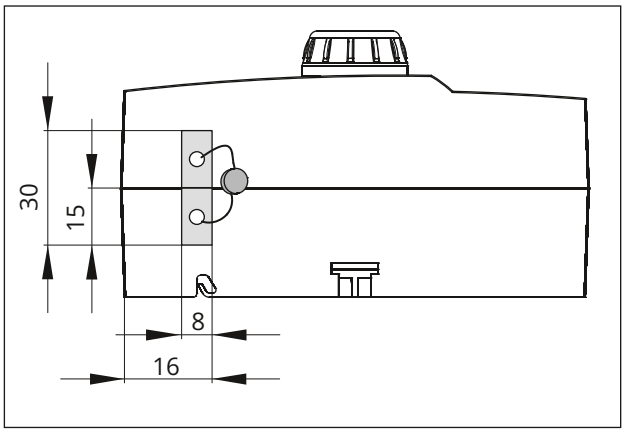

Fig. 16: *Dimensions in mm · Side view*

6 Operation

6.1 Temperature regulator (TR)

Adjust the set point at the set point adjuster (4).

Limiting the set point range

The lower range value and upper range value of the set point range can be limited.

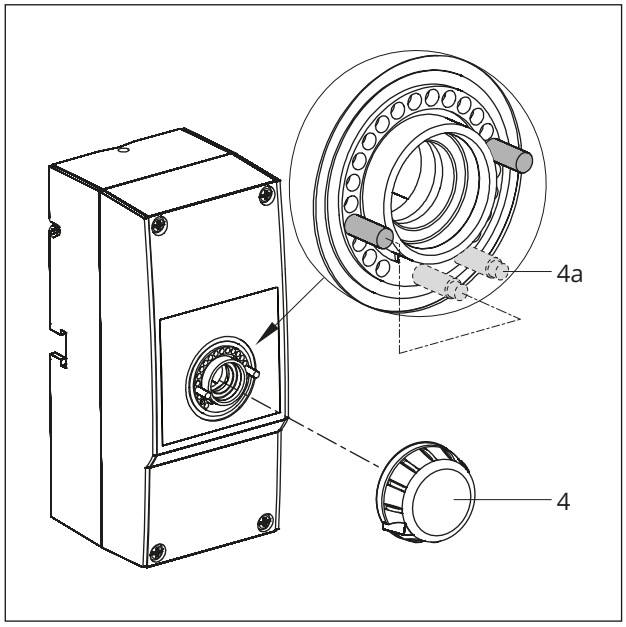

Fig. 17: *Temperature setting (TR)*

4 Set point adjuster
4a Pin to limit the set point range

1. Adjust the set point adjuster (4) to a value within the required temperature range.
2. Pull the set point adjuster (4) off the temperature regulator.
3. Pull off the pin (4a).
4. Insert the pin (4a) at the point where the temperature is to be limited (min./max. temperature).
5. Place the set point adjuster onto the temperature regulator.

6.2 Safety temperature monitor (STM)

Open the thermostat housing and adjust the set point using a flat-blade screwdriver.

6.3 Safety temperature limiter (STL)

Open the thermostat housing and adjust the set point using a flat-blade screwdriver.

⇨ Unlock the safety temperature limiter.

i Note

The safety temperature limiter can only be reset after the temperature has fallen below the adjusted limit by approximately 10 %.

Use a flat-blade screwdriver for unlocking

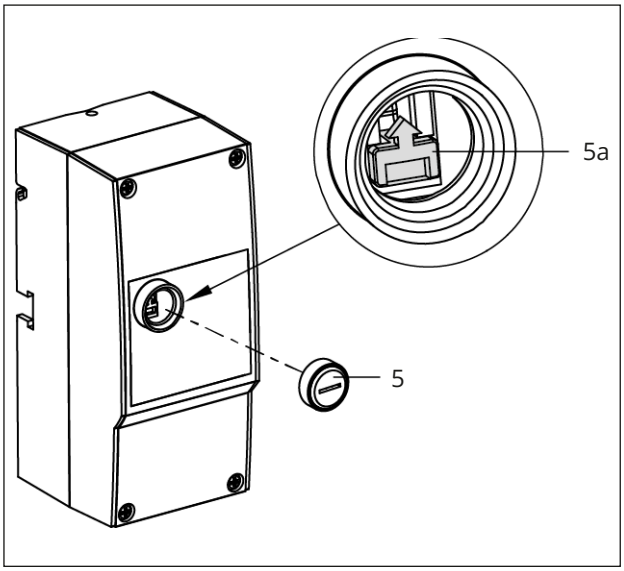

Fig. 18: *Unlocking the STL*

5 Screw lid
5a Spring for unlocking

1. Unscrew the screw lid (5).
2. Use a flat-blade screwdriver to move the spring (5a) from the bottom to the top as far as it will go.

7 Start-up

After correct mounting and connection of the wiring as described in Chapter 5, the thermostat is ready to use.

8 Function

After being mounted correctly and start-up, the thermostat is ready for use.

8.1 Temperature regulator (TR)

The contact switches when the temperature exceeds the adjusted temperature. The contact returns to its original position after the temperature falls below the adjusted temperature by 4 K.

8.2 Safety temperature monitor (STM)

The contact switches when the temperature exceeds the adjusted temperature. The contact returns to its original position after the temperature falls below the adjusted temperature by 8 K.

The contact switches automatically after the temperature falls below -20 °C.

The STM is triggered when the capillary tube breaks.

8.3 Safety temperature limiter (STL)

The contact switches and is locked when the temperature exceeds the adjusted temperature.

The contact switches automatically at a temperature below -20 °C.

i *Note*

The safety temperature limiter can only be reset after the temperature has fallen below the adjusted limit by approximately 10 %.

The STL is triggered and locked when the capillary tube breaks.

9 Malfunctions

⇨ Troubleshooting (see Table 10).

i ***Note***

Contact SAMSON's After-sales Service for malfunctions not listed in the table.

Table 10: *Troubleshooting*

Malfunction	Possible reasons	Recommended action
Thermostat does not switch	Temperature below set point	⇨ Find reason for why the temperature is higher.
	Set point setting incorrect	⇨ Check the set point setting (see Chapter 6).
	Safety temperature limiter (STL) is locked after being triggered too early.	⇨ Unlock the safety temperature limiter (see Chapter 6).
	Safety temperature monitor (STM): medium temperature drops below -20 °C.	⇨ No action necessary The function of the safety temperature monitor (STM) is restored after the medium temperature rises again above -20 °C.
	Safety temperature limiter (STL): medium temperature drops below -20 °C.	⇨ No action necessary The function of the safety temperature limiter (STL) is restored after the medium temperature rises again above -20 °C.
	Temperature sensor cannot measure the temperature of the medium.	⇨ Check the installation and point of installation of the thermostat (see Chapter 5).
	Thermostat not correctly attached	⇨ Check attachment (see Chapter 5). ⇨ Check contact to the medium.
	Incorrect mounting position of the contact thermostat	⇨ Do not install the contact thermostat in the suspended position with the bottom of the housing (containing the sensor) facing upwards. See Chapter 5 concerning installation.
	Incorrect electrical connection	⇨ Check the cable entry and electrical connection (see Chapter 5.5).
	Capillary tube ruptured	⇨ Replace thermostat.
	Lead sealing attached incorrectly	⇨ Check the position of the lead sealing (see Chapter 5).

9.1 Emergency action

The thermostat reacts after the measured temperature in the plant exceeds the adjusted set point (see Chapter 3). Usually, this action causes a valve in the plant to be closed by a safety device to prevent the temperature rising above a certain temperature.

Plant operators are responsible for emergency action to be taken in the plant.

Tip

Emergency action in the event of valve failure is described in the associated valve documentation.

---

10 Servicing

i ***Note***

The thermostat was checked by SAMSON before it left the factory.
The product warranty becomes void if service or repair work not described in these instructions is performed without prior agreement by SAMSON's After-sales Service.

The thermostat does not require any maintenance.

SAMSON recommends inspection and testing according to the following table:

Table 11: *Recommended inspection and testing*

Inspection and testing	Action to be taken in the event of a negative result
Check the markings, labels and nameplates on the device for their readability and completeness.	⇨ Immediately renew damaged, missing or incorrect nameplates or labels. ⇨ Clean any inscriptions that are covered with dirt and are illegible.
Check the electric wiring.	⇨ Tighten any loose terminal screws (see Chapter 5.5).

11 Decommissioning

The work described in this chapter is to be performed only by personnel appropriately qualified to carry out such tasks.

⚠ DANGER

Risk of fatal injury due to electric shock.

⇨ *Before disconnecting live wires at the device, disconnect the supply voltage and protect it against unintentional reconnection.*

⚠ WARNING

Risk of personal injury due to residual process medium inside the pipeline.

While working on the thermostat or thermowell, residual process medium can escape and, depending on its properties, may lead to personal injury, e.g. (chemical) burns.

⇨ *Wear protective clothing, safety gloves and eye protection.*

⚠ WARNING

Risk of burn injuries due to hot or cold components and pipeline.

The thermowell and pipeline may become very hot or cold. Risk of burn injuries.

⇨ *Allow components and pipelines to cool down or warm up to the ambient temperature.*

⇨ *Wear personal protective equipment that is suitable for the purpose.*

To put the thermostat out of operation before removing it, proceed as follows:

⇨ Shut off the process medium.

⇨ If necessary, put the plant (sections) out of operation (see associated documentation).

⇨ Allow sufficient time for any parts that can be touched to cool down.

⇨ Disconnect the supply voltage and protect it against unintentional reconnection.

12 Removal

The work described in this chapter is to be performed only by personnel appropriately qualified to carry out such tasks.

⚠ DANGER

Risk of fatal injury due to electric shock.

⇨ *Before disconnecting live wires at the device, disconnect the supply voltage and protect it against unintentional reconnection.*

NOTICE

Risk of thermostat malfunction due to measuring fluid escaping upon breakage of the capillary tube.

⇨ *Do not bend the capillary tube.*

⇨ *Do not cut the capillary tube.*

⇨ *Do not pull at the sensor on uncoiling the capillary tube.*

⇨ *Do not use a smaller bending radius than 5 mm.*

12.1 Contact thermostat

1. Pull off the set point adjuster (TR only).
2. Undo the screws on the front cover and remove the cover.
3. Disconnect the electrical wires.
4. Undo the strap.

12.2 Wall mounting

1. Pull off the set point adjuster (TR only).
2. Undo the screws on the front cover and remove the cover.
3. Disconnect the electrical wires.
4. Undo the clip used to the capillary tube.
5. Pull the sensor with capillary tube out of the thermowell.
6. Unscrew the fastening screws.

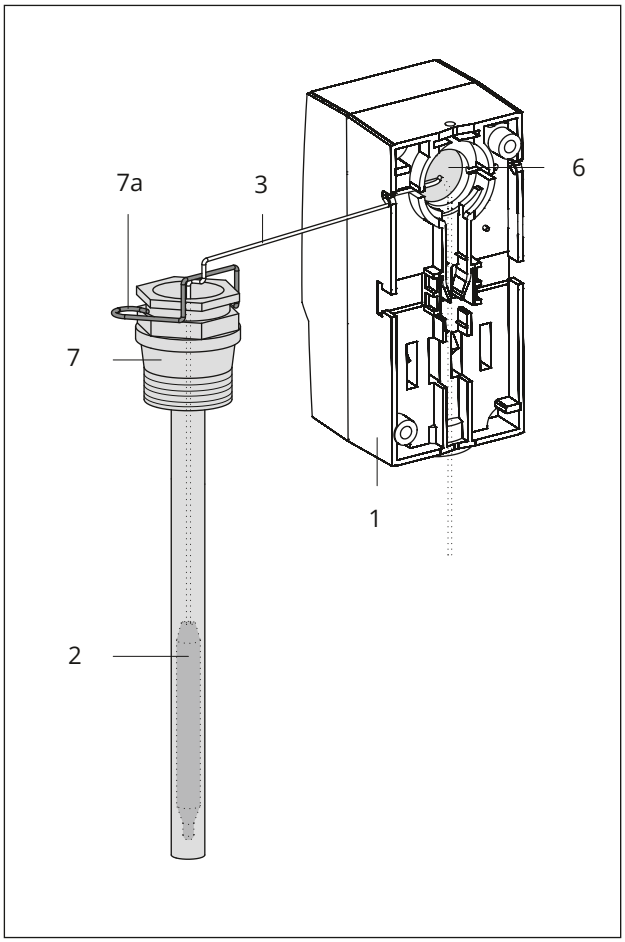

Fig. 19: *Wall mounting · Capillary tube in the thermowell*

1 Thermostat
2 Sensor
3 Capillary tube
6 Seal
7 Thermowell
7a Clip

12.3 Thermostat mounted on the thermowell

1. Pull off the set point adjuster (TR only).
2. Undo the screws on the front cover and remove the cover.
3. Disconnect the electrical wires.
4. Undo the screw (7c).
5. Push the thermostat approx. 2 mm lengthways away from the SAMSON logo to detach it from the thermowell.
6. Pull the sensor with capillary tube out of the thermowell.

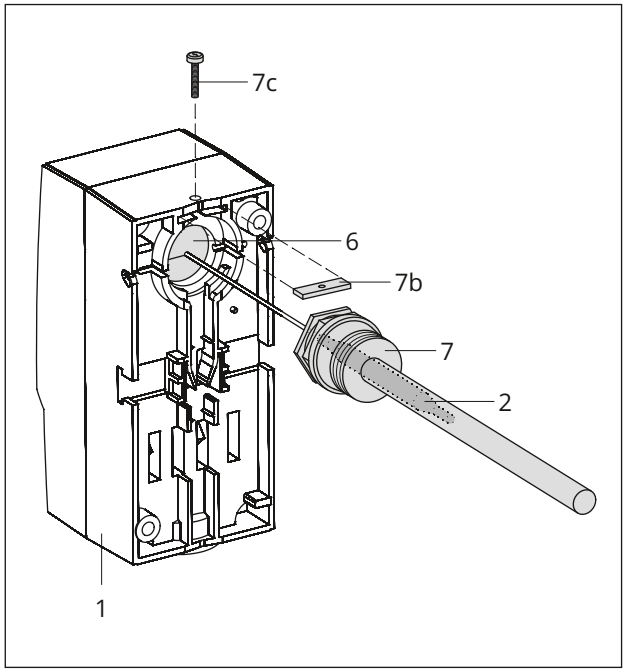

Fig. 20: *Mounting with thermowell onto a tank or pipe*

1 Thermostat
2 Sensor
6 Seal
7 Thermowell
7b Metal plate
7c Screw

13 Repairs

If the thermostat does not function properly according to how it was originally configured or does not function at all, it is defective and must be exchanged.

NOTICE

Risk of thermostat damage due to incorrect service or repair work.

⇨ *Do not perform any repair work on your own.*

⇨ *Contact SAMSON's After-sales Service.*

13.1 Sending the thermostat to SAMSON

Defective thermostats can be returned to SAMSON for examination. Proceed as follows to return thermostats:

1. Remove the thermostat (see Chapter 12).
2. Continue as described on our website at ▶ www.samsongroup.com > Service > After-sales Service > Returning goods.

14 Disposal



SAMSON is a producer registered in Europe, agency in charge
▶ www.samsongroup.com > About SAMSON > Environment, Social & Governance > Material Compliance > Waste electrical and electronic equipment (WEEE)
WEEE reg. no.: DE 62194439

Information on substances listed as substances of very high concern (SVHC) on the candidate list of the REACH regulation can be found in the document “Additional Information on Your Inquiry/Order”, which is added to the order documents, if applicable. This document includes the SCIP number assigned to the devices concerned. This number can be entered into the database on the European Chemicals Agency (ECHA) website (▶ https://www.echa.europa.eu/scip-database) to find out more information on the SVHC contained in the device.

Note

SAMSON can provide you with a recycling passport on request. Simply e-mail us at aftersalesservice@samsongroup.com giving details of your company address.

Tip

On request, SAMSON can appoint a service provider to dismantle and recycle the product as part of a distributor take-back scheme.

⇨ Observe local, national and international refuse regulations.

⇨ Do not dispose of components, lubricants and hazardous substances together with your other household waste.

15 Certificates

The following certificates are included on the next pages:

– EU declarations of conformity

▶ www.samsongroup.com > Products > Sensors and thermostats > 5343-1
▶ www.samsongroup.com > Products > Sensors and thermostats > 5343-2
▶ www.samsongroup.com > Products > Sensors and thermostats > 5343-3
▶ www.samsongroup.com > Products > Sensors and thermostats > 5343-4
▶ www.samsongroup.com > Products > Sensors and thermostats > 5344-1
▶ www.samsongroup.com > Products > Sensors and thermostats > 5344-2
▶ www.samsongroup.com > Products > Sensors and thermostats > 5345-1
▶ www.samsongroup.com > Products > Sensors and thermostats > 5345-2
▶ www.samsongroup.com > Products > Sensors and thermostats > 5347-1
▶ www.samsongroup.com > Products > Sensors and thermostats > 5347-2
▶ www.samsongroup.com > Products > Sensors and thermostats > 5348-1
▶ www.samsongroup.com > Products > Sensors and thermostats > 5348-2
▶ www.samsongroup.com > Products > Sensors and thermostats > 5349-1

SAMSON

EU Konformitätserklärung / EU Declaration of Conformity / Déclaration UE de conformité

Die alleinige Verantwortung für die Ausstellung dieser Konformitätserklärung trägt der Hersteller/
This declaration of conformity is issued under the sole responsibility of the manufacturer/
La présente déclaration de conformité est établie sous la seule responsabilité du fabricant.

Für das folgende Produkt / For the following product / Nous certifions que le produit

Sicherheitstemperaturwächter (STW) / Safety Temperatur Monitor (STW) / Contrôleur de température de sécurité (STW)
Typ / Type / Type 5343

wird die Konformität mit den einschlägigen Harmonisierungsrechtsvorschriften der Union bestätigt / the conformity with the relevant Union harmonisation legislation is declared with/ est conforme à la législation d'harmonisation de l'Union applicable selon les normes:

EMC 2014/30/EU	61000-6-2:2005, EN 61000-6-3:2007 +A1:2011, EN 61326-1:2013
LVD 2014/35/EU	EN 60730-1:2016, EN 61010-1:2010
RoHS 2011/65/EU	EN 50581:2012

Hersteller / Manufacturer / Fabricant:

SAMSON AKTIENGESELLSCHAFT
Weismüllerstraße 3
D-60314 Frankfurt am Main
Deutschland/Germany/Allemagne

Frankfurt / Francfort, 2017-07-29

Im Namen des Herstellers/ On behalf of the Manufacturer/ Au nom du fabricant.

i.V. Gert Nahler

Gert Nahler
Zentralabteilungsleiter/Head of Department/Chef du département
Entwicklung Automation und Integrationstechnologien/
Development Automation and Integration Technologies

i v. H. Zager

Hanno Zager
Leiter Qualitätssicherung/Head of Quality Managment/
Responsable de l'assurance de la qualité

ce_5343-0_de_en_fra_rev07.pdf

SAMSON

EU Konformitätserklärung / EU Declaration of Conformity / Déclaration UE de conformité

Die alleinige Verantwortung für die Ausstellung dieser Konformitätserklärung trägt der Hersteller/
This declaration of conformity is issued under the sole responsibility of the manufacturer/
La présente déclaration de conformité est établie sous la seule responsabilité du fabricant.

Für das folgende Produkt / For the following product / Nous certifions que le produit

Temperaturregler (TR) / Temperature Controller (TR) / Régulateur de température (TR)
Typ / Type / Type 5344

wird die Konformität mit den einschlägigen Harmonisierungsrechtsvorschriften der Union bestätigt / the conformity with the relevant Union harmonisation legislation is declared with/ est conforme à la législation d'harmonisation de l'Union applicable selon les normes:

EMC 2014/30/EU	61000-6-2:2005, EN 61000-6-3:2007 +A1:2011, EN 61326-1:2013
LVD 2014/35/EU	EN 60730-1:2016, EN 61010-1:2010
RoHS 2011/65/EU	EN 50581:2012

Hersteller / Manufacturer / Fabricant:

SAMSON AKTIENGESELLSCHAFT
Weismüllerstraße 3
D-60314 Frankfurt am Main
Deutschland/Germany/Allemagne

Frankfurt / Francfort, 2017-07-29

Im Namen des Herstellers/ On behalf of the Manufacturer/ Au nom du fabricant.

i.V. Gert Nahler

Gert Nahler
Zentralabteilungsleiter/Head of Department/Chef du département
Entwicklung Automation und Integrationstechnologien/
Development Automation and Integration Technologies

i v. H. Zager

Hanno Zager
Leiter Qualitätssicherung/Head of Quality Managment/
Responsable de l'assurance de la qualité

ce_5344-0_de_en_fra_rev07.pdf

SMART IN FLOW CONTROL.

SAMSON

EU Konformitätserklärung / EU Declaration of Conformity / Déclaration UE de conformité

Die alleinige Verantwortung für die Ausstellung dieser Konformitätserklärung trägt der Hersteller/
This declaration of conformity is issued under the sole responsibility of the manufacturer/
La présente déclaration de conformité est établie sous la seule responsabilité du fabricant.

Für das folgende Produkt / For the following product / Nous certifions que le produit

Sicherheitstemperaturbegrenzer (STB) / Safety Temperatur Limiter (STB) / Limiteur de température de sécurité (STB)
Typ / Type / Type 5345

wird die Konformität mit den einschlägigen Harmonisierungsrechtsvorschriften der Union bestätigt / the conformity with the relevant Union harmonisation legislation is declared with/ est conforme à la législation d'harmonisation de l'Union applicable selon les normes:

EMC 2014/30/EU	61000-6-2:2005, EN 61000-6-3:2007 +A1:2011, EN 61326-1:2013
LVD 2014/35/EU	EN 60730-1:2016, EN 61010-1:2010
RoHS 2011/65/EU	EN 50581:2012

Hersteller / Manufacturer / Fabricant:

SAMSON AKTIENGESELLSCHAFT
Weismüllerstraße 3
D-60314 Frankfurt am Main
Deutschland/Germany/Allemagne

Frankfurt / Francfort, 2017-07-29

Im Namen des Herstellers/ On behalf of the Manufacturer/ Au nom du fabricant.

i.V. Gert Nahler

Gert Nahler
Zentralabteilungsleiter/Head of Department/Chef du département
Entwicklung Automation und Integrationstechnologien/
Development Automation and Integration Technologies

i v. H. Zager

Hanno Zager
Leiter Qualitätssicherung/Head of Quality Managment/
Responsable de l'assurance de la qualité

ce_5345-0_de_en_fra_rev07.pdf

SAMSON

EU Konformitätserklärung / EU Declaration of Conformity / Déclaration UE de conformité

Die alleinige Verantwortung für die Ausstellung dieser Konformitätserklärung trägt der Hersteller/
This declaration of conformity is issued under the sole responsibility of the manufacturer/
La présente déclaration de conformité est établie sous la seule responsabilité du fabricant.

Für das folgende Produkt / For the following product / Nous certifions que le produit

Doppelthermostat TR/STB / Double Thermostat TR/STB / Thermostat double TR/STB
Typ / Type / Type 5347

wird die Konformität mit den einschlägigen Harmonisierungsrechtsvorschriften der Union bestätigt /
the conformity with the relevant Union harmonisation legislation is declared with/
est conforme à la législation d'harmonisation de l'Union applicable selon les normes:

EMC 2014/30/EU	61000-6-2:2005, EN 61000-6-3:2007 +A1:2011, EN 61326-1:2013
LVD 2014/35/EU	EN 60730-1:2016, EN 61010-1:2010
RoHS 2011/65/EU	EN 50581:2012

Hersteller / Manufacturer / Fabricant:

SAMSON AKTIENGESELLSCHAFT
Weismüllerstraße 3
D-60314 Frankfurt am Main
Deutschland/Germany/Allemagne

Frankfurt / Francfort, 2017-07-29

Im Namen des Herstellers/ On behalf of the Manufacturer/ Au nom du fabricant.

i.V. Gert Nahler

Gert Nahler
Zentralabteilungsleiter/Head of Department/Chef du département
Entwicklung Automation und Integrationstechnologien/
Development Automation and Integration Technologies

i v. H. Zager

Hanno Zager
Leiter Qualitätssicherung/Head of Quality Managment/
Responsable de l'assurance de la qualité

ce_5347-0_de_en_fra_rev07.pdf

EU Konformitätserklärung / EU Declaration of Conformity / Déclaration UE de conformité

Die alleinige Verantwortung für die Ausstellung dieser Konformitätserklärung trägt der Hersteller/
This declaration of conformity is issued under the sole responsibility of the manufacturer/
La présente déclaration de conformité est établie sous la seule responsabilité du fabricant.

Für das folgende Produkt / For the following product / Nous certifions que le produit

Doppelthermostat TR/STW / Double Thermostat TR/STW / Thermostat double TR/STW
Typ / Type / Type 5348

wird die Konformität mit den einschlägigen Harmonisierungsrechtsvorschriften der Union bestätigt /
the conformity with the relevant Union harmonisation legislation is declared with/
est conforme à la législation d'harmonisation de l'Union applicable selon les normes:

EMC 2014/30/EU	61000-6-2:2005, EN 61000-6-3:2007 +A1:2011, EN 61326-1:2013
LVD 2014/35/EU	EN 60730-1:2016, EN 61010-1:2010
RoHS 2011/65/EU	EN 50581:2012

Hersteller / Manufacturer / Fabricant:

SAMSON AKTIENGESELLSCHAFT
Weismüllerstraße 3
D-60314 Frankfurt am Main
Deutschland/Germany/Allemagne

Frankfurt / Francfort, 2017-07-29

Im Namen des Herstellers/ On behalf of the Manufacturer/ Au nom du fabricant.

i.V. Gert Nahler

Gert Nahler
Zentralabteilungsleiter/Head of Department/Chef du département
Entwicklung Automation und Integrationstechnologien/
Development Automation and Integration Technologies

i v. H. Zager

Hanno Zager
Leiter Qualitätssicherung/Head of Quality Managment/
Responsable de l'assurance de la qualité

SAMSON AKTIENGESELLSCHAFT
Weismüllerstraße 3 60314 Frankfurt am Main
Telefon: 069 4009-0 · Telefax: 069 4009-1507
E-Mail: samson@samson.de

SMART IN FLOW CONTROL.

SAMSON

EU Konformitätserklärung / EU Declaration of Conformity / Déclaration UE de conformité

Die alleinige Verantwortung für die Ausstellung dieser Konformitätserklärung trägt der Hersteller/
This declaration of conformity is issued under the sole responsibility of the manufacturer/
La présente déclaration de conformité est établie sous la seule responsabilité du fabricant.

Für das folgende Produkt / For the following product / Nous certifions que le produit

Doppelthermostat STW/STB / Double Thermostat STW/STB / Thermostat double STW/STB
Typ / Type / Type 5349

wird die Konformität mit den einschlägigen Harmonisierungsrechtsvorschriften der Union bestätigt / the conformity with the relevant Union harmonisation legislation is declared with/ est conforme à la législation d'harmonisation de l'Union applicable selon les normes:

EMC 2014/30/EU	61000-6-2:2005, EN 61000-6-3:2007 +A1:2011, EN 61326-1:2013
LVD 2014/35/EU	EN 60730-1:2016, EN 61010-1:2010
RoHS 2011/65/EU	EN 50581:2012

Hersteller / Manufacturer / Fabricant:

SAMSON AKTIENGESELLSCHAFT
Weismüllerstraße 3
D-60314 Frankfurt am Main
Deutschland/Germany/Allemagne

Frankfurt / Francfort, 2017-07-29

Im Namen des Herstellers/ On behalf of the Manufacturer/ Au nom du fabricant.

i.V. Gert Nahler

Gert Nahler
Zentralabteilungsleiter/Head of Department/Chef du département
Entwicklung Automation und Integrationstechnologien/
Development Automation and Integration Technologies

i v. H. Zager

Hanno Zager
Leiter Qualitätssicherung/Head of Quality Managment/
Responsable de l'assurance de la qualité

ce_5349-0_de_en_fra_rev07.pdf

16 Appendix

16.1 Accessories

Table 12: *Accessories*

Thermowell	Max. pressure at 150 °C	Mat. no.
For single thermostats		
Nickel-plated brass · CuZn (2.0401)		
100x8 mm	48 bar	1400-9844
150x8 mm	48 bar	1400-9845
200x8 mm	48 bar	1400-9846
CrNiMo steel (1.4571)		
100x8 mm	88 bar	1400-9848
150x8 mm	88 bar	1400-9849
300x8 mm	88 bar	1400-9850
For double thermostats		
Nickel-plated brass · CuZn (2.0401)		
100 x (2x8) mm	48 bar	1400-9901
150 x (2x8) mm	48 bar	1400-9851
CrNiMo steel (1.4571)		
100x15 mm	48 bar	1402-0340
150x15 mm	48 bar	1402-9853
300x15 mm	48 bar	1402-9854
Strap		
For mounting the contact thermostat (15 to 100 mm pipe diameter)		1400-9865

i ***Note***

The scope of delivery of the thermowell includes the following parts:

- *A clip to fasten the capillary tube to the thermowell (see Chapter 5)*
- *A small metal plate with screw to attach the thermostat to the thermowell (see Chapter 5)*

16.2 After-sales service

Contact our after-sales service for support concerning service or repair work or when malfunctions or defects arise.

You can reach our after-sales service at the following e-mail address:

▶ aftersalesservice@samsongroup.com

The addresses of SAMSON AG, its subsidiaries, representatives and service facilities worldwide can be found on our website (▶ www.samsongroup.com) or in all product catalogs.

Please submit the following details:

- Type designation
- Configuration ID
- Production number

SAMSON AKTIENGESELLSCHAFT
Weismüllerstraße 3 · 60314 Frankfurt am Main, Germany
Phone: +49 69 4009-0 · Fax: +49 69 4009-1507
samson@samsongroup.com · www.samsongroup.com

2026-06-05 | English | 4000299801 | 1.7